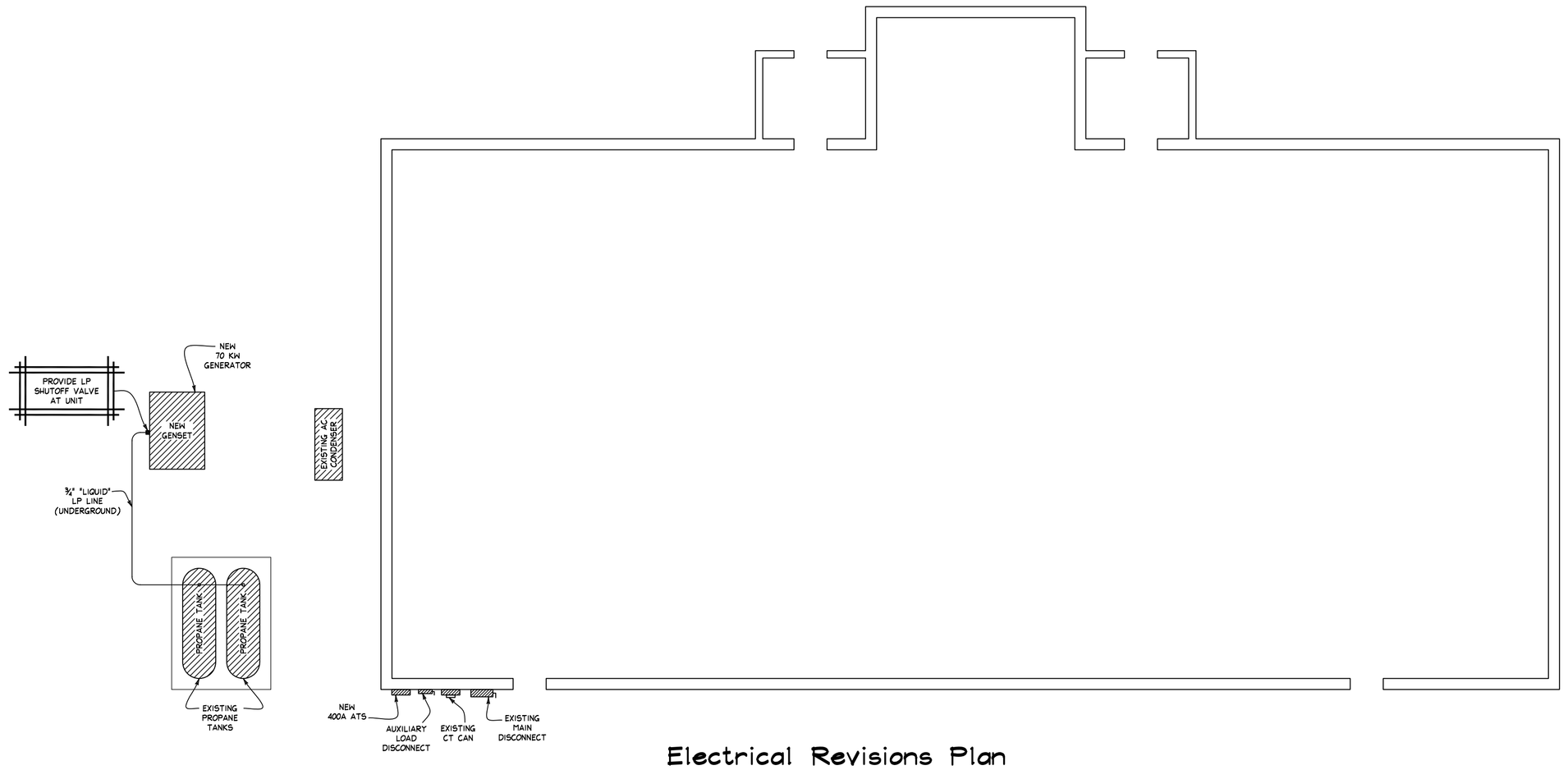

Electrical Revisions Plan

Scale: 1/8" = 1'-0"

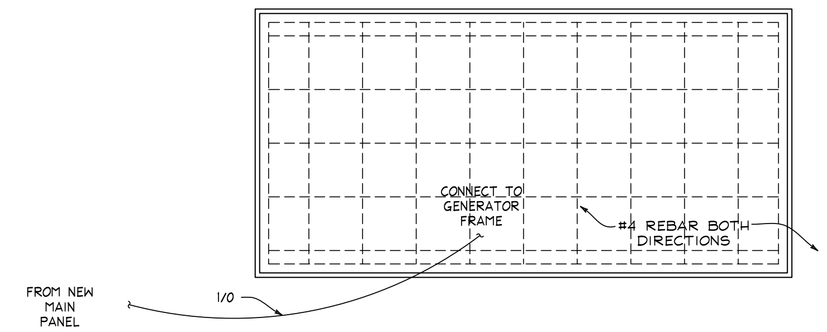

Emergency Generator Grounding Details

SCALE: NTS

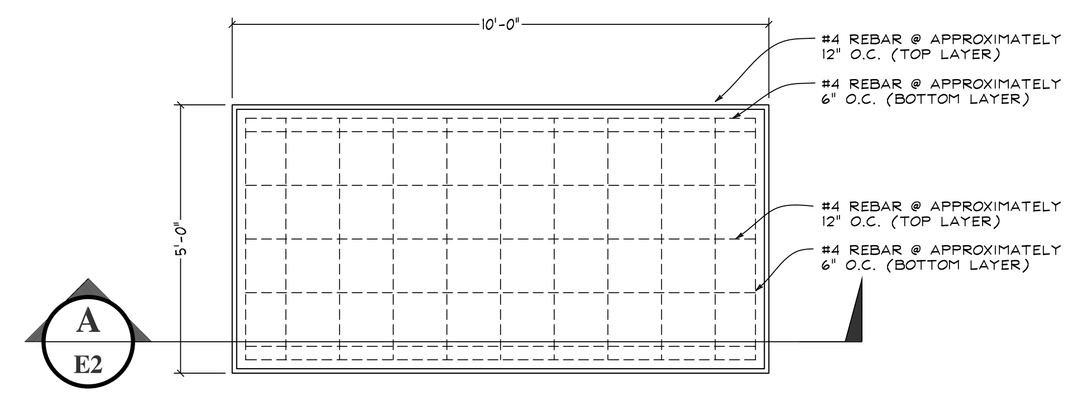

Emergency Generator Pad

SCALE: NTS

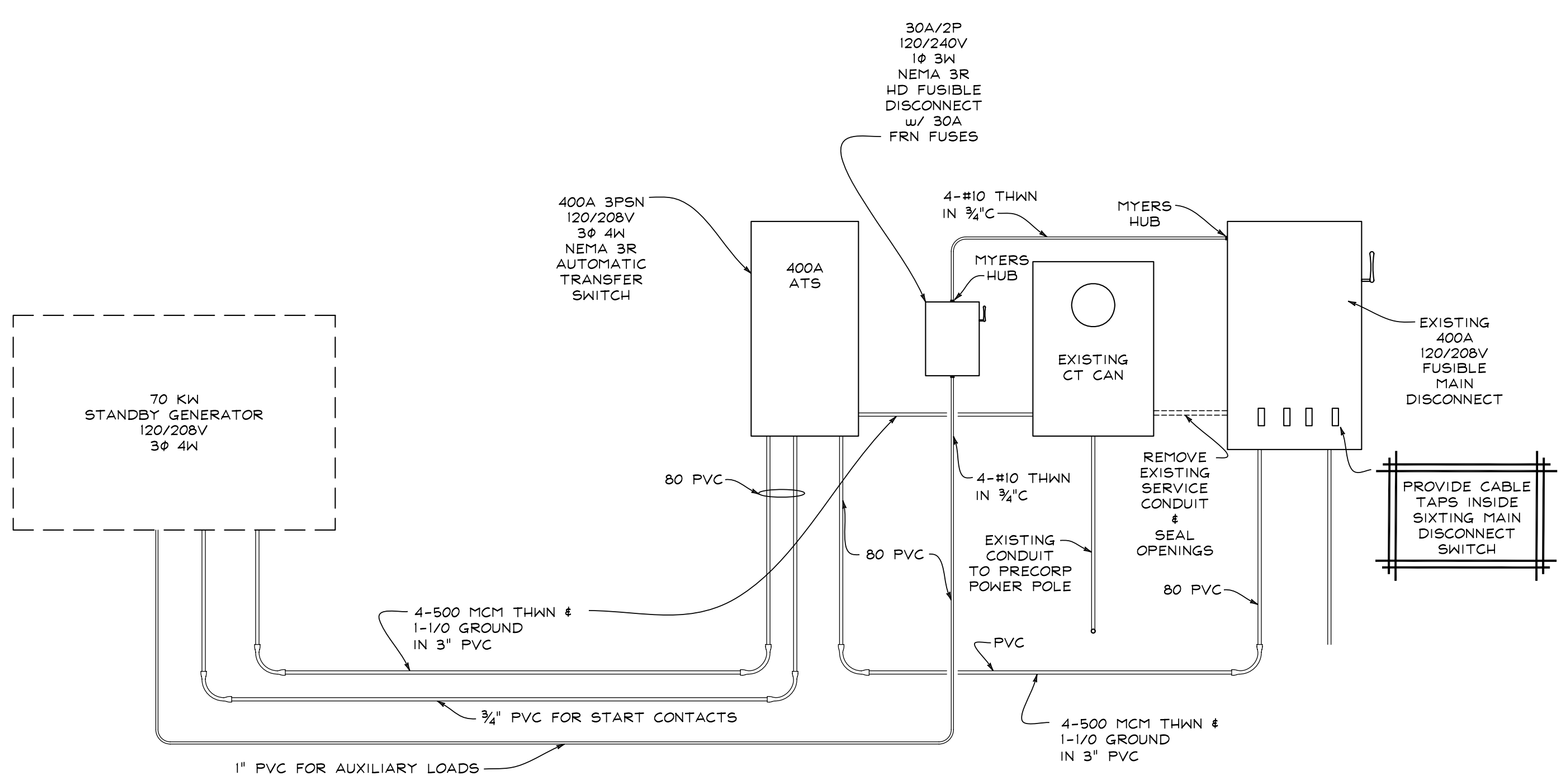

Generator Control/Power Details

Not to Scale

NOTE:
CONTRACTOR TO CONSTRUCT GENERATOR PAD 6" LARGER THAN GENSET.

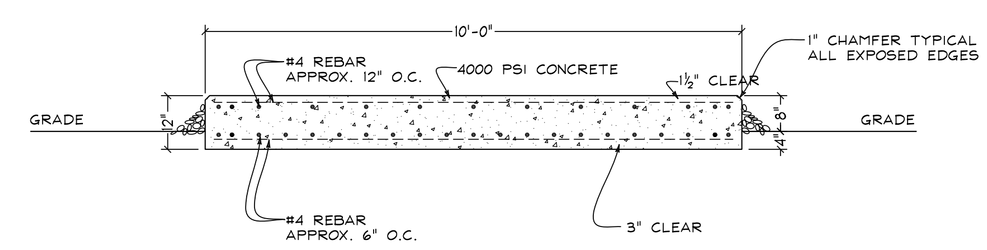

Section A

SCALE: NTS

ELECTRICAL DESIGN CONSULTANTS

DOUGLAS E. VALLIS PE

OFFICE (605) 341-1250 • FAX (605) 341-1250
2527 JUNCTION DRIVE
RAPID CITY, SOUTH DAKOTA 57702

Professional Engineer (Electrical)
DOUGLAS E. VALLIS
3615
Date 1/25/10
WYOMING

Crook County
Public Health Building

Sundance, Wyoming

ELECTRICAL
PLANS and DETAILS

PROJECT NO.: 1001
FILE NO.: E1
DESIGN BY: DEV
DRAWN BY: MLB
CHECKED BY: DEV
DATE: 1/25/10

REVISIONS		
NO.	DATE	BY
1		
2		
3		

E1

OF 1